REVISION NAD APROVAL SCHEDULE				
ITEM	PROVIDE	SIGNATURE	PROVIDED	1RST.
REVISION	ANT.		ACT.	
APROVAL	DATE:		FINAL:	

LV-56

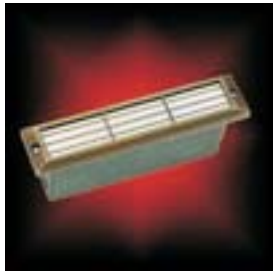

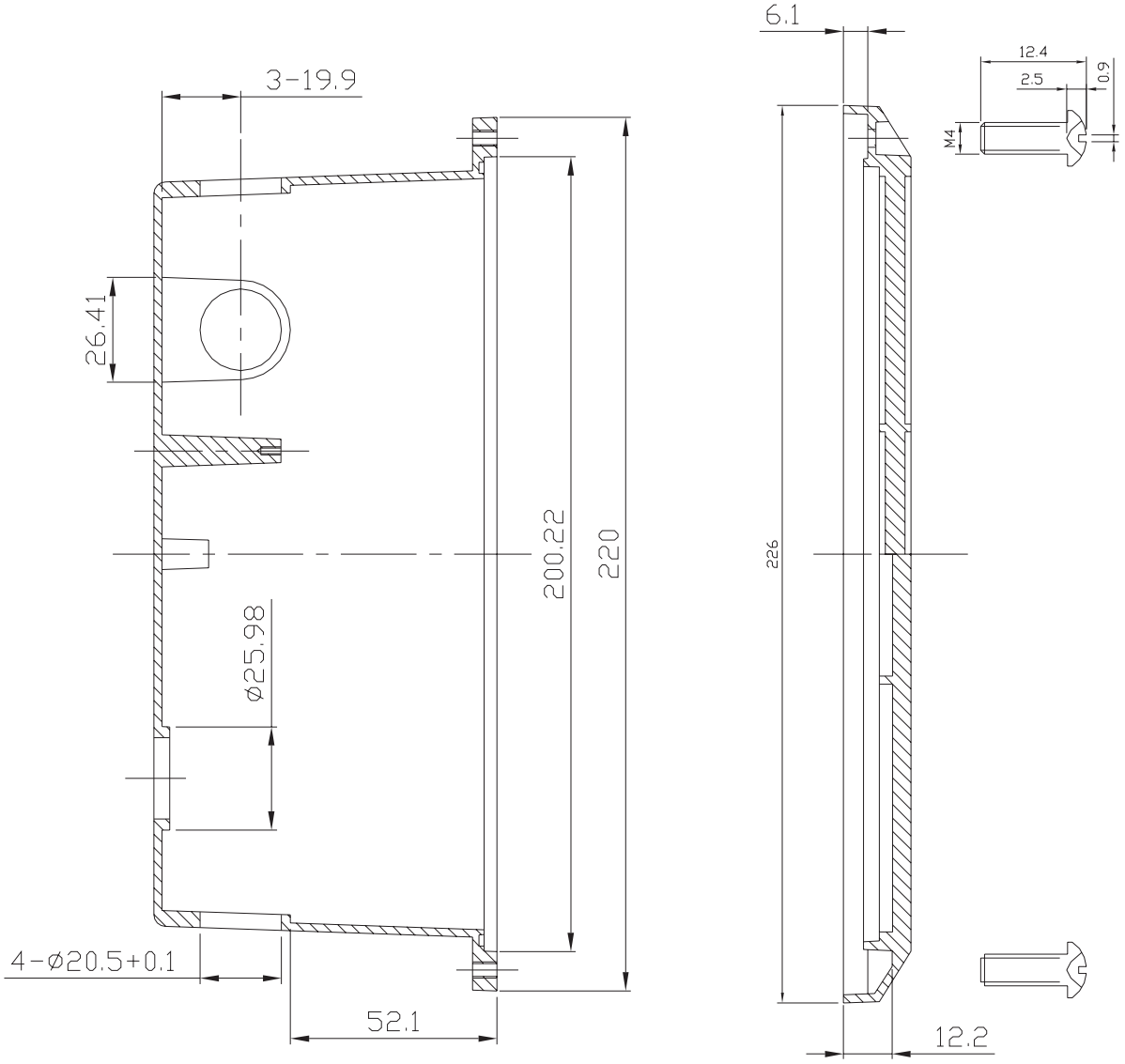

BQL LIGHTING

MODEL	FRESNO LV-56	SOLID CAST BRASS
	LAMP:	20 WATTS G4 Max
FINISH:BRONZE,VERDE &STAINLESS STEEL		12V.DC 1of1